A few simple steps to ensure perfect water, every time.

avalon

AVALON A9 Manual

MODELS: A9

We're Here to Help

Email Us:
support@avalonh2o.com
sales@avalonh2o.com

Availability:
Monday-Friday: 9 a.m.-5 p.m.

Let's Connect

Follow our social media accounts and stay up to date on the latest Avalon news.

@avalon_h2o Avalon Water Coolers Avalonh2o

www.avalonh2o.com

Use and Care Guide

MODEL: A9

Registration

Please visit the website below to register your new water cooler within the first 30 days of purchase. Registration within the first 30 days will activate your one year warranty.

www.avalonh2o.com/register-my-avalon-cooler

Please keep your model number, order number and purchase date for future support. You can reach us at support@avalonh2o.com.

Model Number _____

Order Number _____

Purchase Date _____

c UL us LISTED

NSF

Tested and Certified by NSF International against NSF/ANSI Standard 42 & 53 in model A4FILTER for the reduction of lead, chlorine, cyst.

REPLACEMENT ELEMENT

NSF

This A5FILTER is Tested and Certified by NSF International against NSF/ANSI Standard 42 for materials and structural integrity requirements.

COMPONENT

Contents

About Your Water Cooler

Meet Your Avalon Product	1–2
Part Names	3–4
Control Panel	5–6
Tech Specs	7
Filter Function Introduction	8

Getting Started

Unpacking	10
Installation (Under the Sink)	11–12
Installation (Refrigerator Water Line)	13
Flushing Filters	14–15
Finishing Water Cooler Installation	16–19
Installing and Removing the Drip Tray	20

User Guide and Maintenance

Replacing the Filters	22–24
Leak Detection	25

Cleaning

Rinsing, Cleaning, and Draining	27–30
Cleaning	31–32

Troubleshooting	34–35
Safety	37–38
Warranty	40

Meet Your Avalon Product

Inside the box, you'll find:

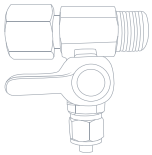

Metal Adapter with Valve

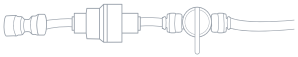

Valve and Tube Assembly

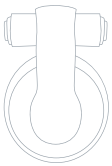

Filter Flushing Adapter

Carbon Block Filter

Sediment Filter

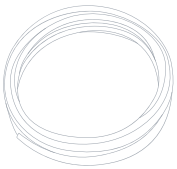

PE Tubing (20')

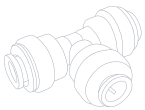

Three Way Plastic Adapter

Meet Your Avalon Product

Attractive Design

Modern countertop design with electric touch controls

Custom Temperature

Piping hot, room temperature, or crisp cold water

Dual Stage Filtration

Double the filtration for twice the peace of mind

Worry-Free Cleaning

Self-cleaning UV function for longer lasting water purification

NSF Certified Filters

We meet strict standards for public health protection

UL Listed

We design & manufacture with your safety in mind

Child Safety Feature

Ensures safe hot water flow for the entire family

Part Names

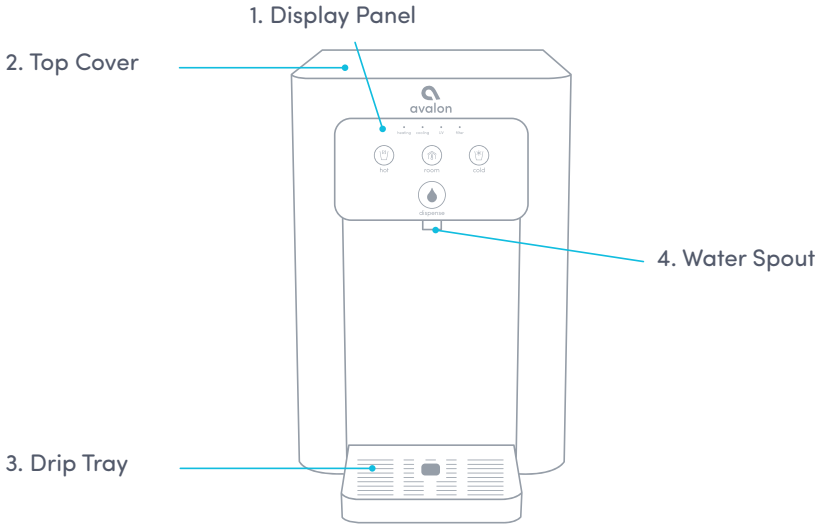

Front

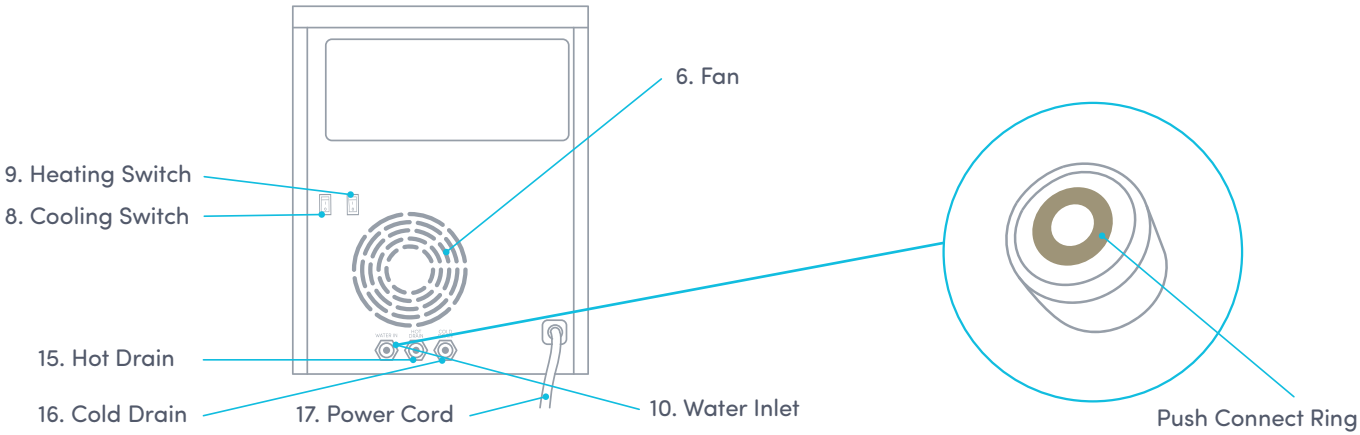

Back

Part Names

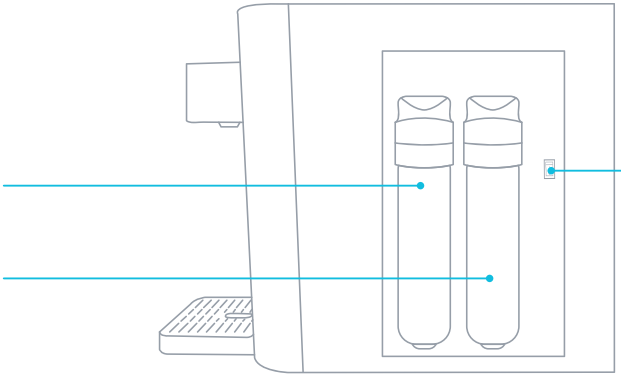

Right

Control Panel

After installation and powering on the unit, allow 5 minutes for the water to fill inside the machine. After 5 minutes, you will need to hold down the dispense button for 1 minute for both hot and cold water in order for water to dispense when using the machine for the first time as the water needs to be siphoned into the hot and cold tanks.

Hot Water Button
Touch to illuminate, then touch and hold the dispense button for a continuous flow of water. You will need to keep your finger on the dispense button until you want the flow to stop.

Room Temperature Water Button
Touch to illuminate, then touch and hold the dispense button for a continuous flow of water. You will need to keep your finger on the dispense button until you want the flow to stop.

Cold Water Button
Touch to illuminate, then touch and hold the dispense button for a continuous flow of water. You will need to keep your finger on the dispense button until you want the flow to stop.

Filter

Replace Filter Indicator
When the filters are active, the indicator will be lit up. Once the filters are near their expiration, the indicator will flash. When the filters' lifetime are up, the filter indicator will continue to blink and the machine will beep to let you know that the filters need to be changed.

Control Panel

UV

Self-Cleaning Indicator
The internal water reservoir has a self-sanitizing UV LED bulb that will sanitize any water entering the machine. This also helps prevent any bacteria from building up inside the machine. The UV will turn on and off automatically and this indicator will let you know when it is sanitizing.

Dispense Button
Touch this button to dispense water. You will need to hold your finger on this button for the continuous flow of water. When you release your finger, the flow will stop.

Tech Specs

Model	A9
Hot/Cold/Room Temp Output	1.8L/min / 1.8L/min / 1.8L/min
Hot Water Capacity	4 L/H (≥ 185°F)
Hot Tank Volume	0.8 Liters
Cold Water Capacity	3 L/H (≤ 185°F)
Cold Tank Volume	1.2 Liters
Applicable Water Pressure	0.1-0.4 MPa
Applicable Water	Tap Water
Stage 1 Filtration	Sediment Filter
Stage 2 Filtration	Carbon Block Filter
Product Size	21"(L)x11"(W)x16"(H)
Packing Size	22"(L)x16"(W)x25"(H)
Net Weight/Gross Weight	30.85 lb / 33 lb
Voltage/Frequency	115 V 60Hz
Cooling Method	Compressor
Heating Method	Internal Element
Heating Watts / Cooling Watts	420W / 100W
Power Consumption	555 W

Filter Function Introduction

Stage	Filter	Function
Stage 1	Sediment Filter	Course filtration of raw water to remove rust, dirt and sediment
Stage 2	Carbon Block Filter	Removes the water odor, residual chlorine, organic matter, and lead to improve taste

Getting Started

Unpacking Your Avalon Water Cooler

Locating Dispenser

- Do NOT plug in the power cord yet.
- Place dispenser upright on a hard and level surface in a cool and shaded location near a grounded wall outlet. Position the dispenser so there is about 4 inches of clearance from the wall on the back and both sides.

Locating Accessories

- Unpack the product and install the drip tray by inserting it into place, see page 20.

Installation (Under the Sink)

Installing the Metal Adapter with Valve

1. Turn off the current cold water supply that is the source of water to your sink.

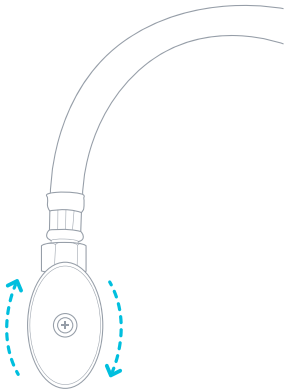

2. Disconnect the current cold water supply line under your sink.

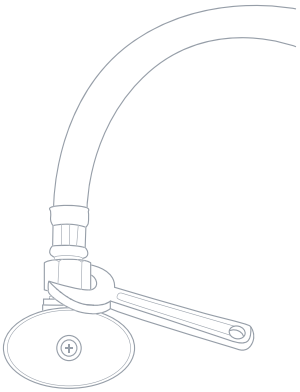

3. Connect the Metal Adapter with Valve between the cold water supply line and cold water valve.

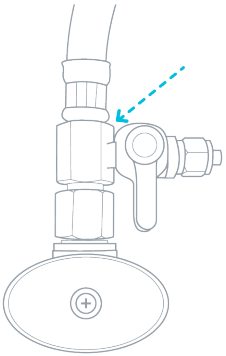

Installation (Under the Sink)

Installing the Metal Adapter with Valve

4. Remove the nut from the Metal Adapter and insert the PE Tubing through the nut. Slide the PE Tubing onto the protruding part of the Adapter where the nut was located until it reaches the threading.

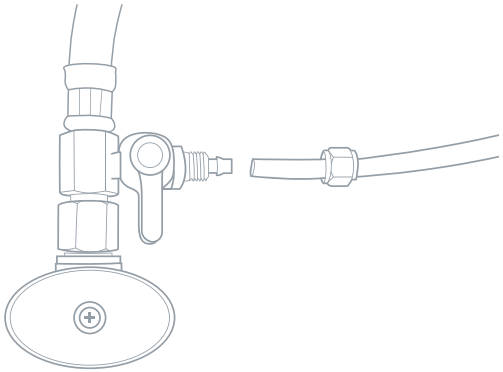

5. Screw the nut tightly into place to keep the PE Tubing securely connected to the Metal Adapter with Valve. Make sure the Valve is in the off position (perpendicular to the PE Tubing).

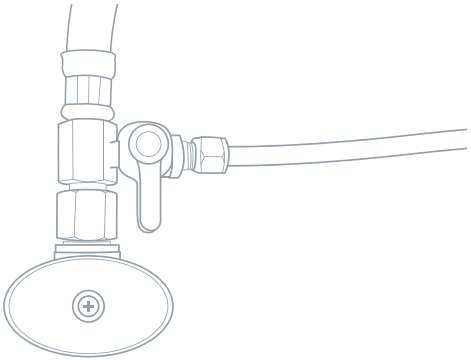

Installation (Refrigerator Water Line)

Installing the Three Way Plastic Adapter

1. Turn off the current cold water supply that is the source of water to your refrigerator line.

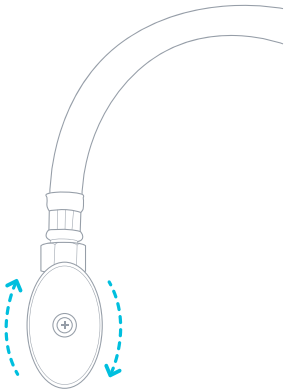

2. Cut the current ¼" tubing that is connected to the back of your refrigerator or ice maker near the end of it that is currently inserted into the refrigerator.

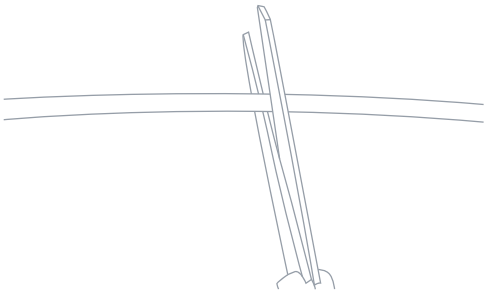

3. Insert each cut end of the existing ¼" tubing into one of the holes of the Three Way Plastic Adapter.

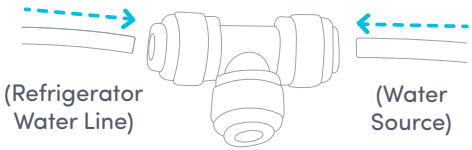

4. Insert one end of the PE Tubing that is supplied with the water cooler into the third opening of the Three Way Plastic Adapter.

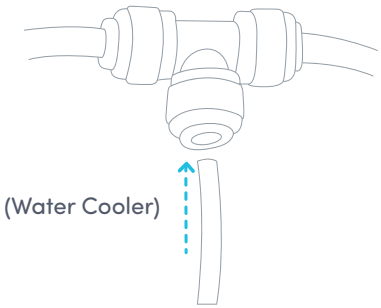

Flushing Filters Prior to Use

Before continuing with installation, it is recommended that you flush both filters for approximately 2 minutes.

1. Twist the sediment filter into the provided Filter Flushing Adapter by rotating it clockwise.

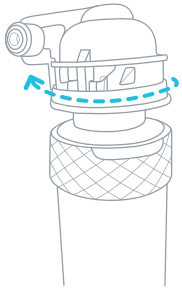

2. Take the open end of the PE Tubing that is now connected to your water supply and insert it into the left inlet hole on the Filter Flushing Adapter in the direction of the arrow.

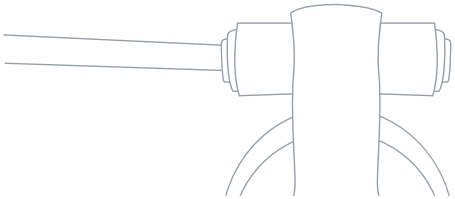

3. Hold the filter with the Filter Flushing Adapter in place over a sink. Turn the Valve of the Metal Adapter at the water source to the on position (the on position is parallel to the Tubing) and allow the water to flow through the adapter and the filter for approximately 2 minutes to flush the new filter.

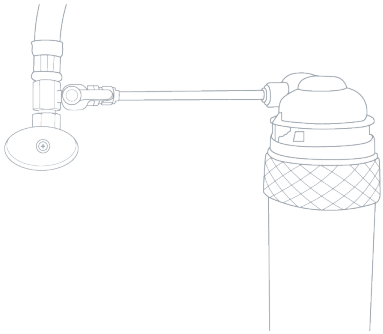

4. Turn the Valve of the Metal Adapter at the water source back to the off position, remove the filter from the Filter Flushing Adapter.

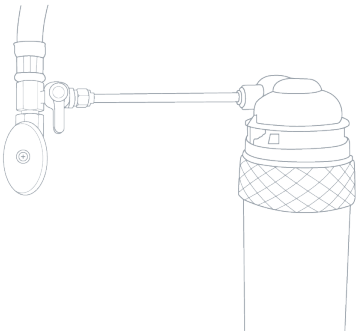

Flushing Filters Prior to Use

5. Repeat the same steps with the Carbon Block Filter.

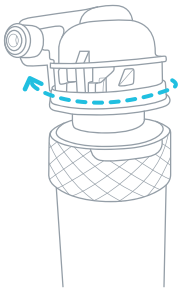

6. Remove the end of the PE Tubing from the Filter Flushing Adapter by pressing in on the push connect ring and pulling out the PE Tubing.

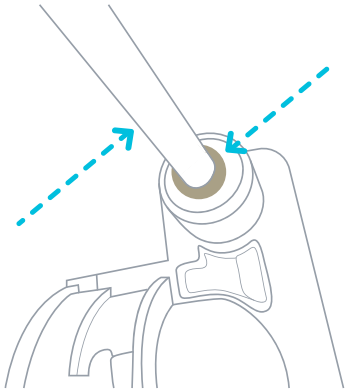

Finishing the Water Cooler Installation

Once you have flushed the filters and removed the filters and PE Tubing from the Filter Flushing Adaptor, you are ready to complete the installation process.

1. Twist the Sediment Filter into the left filter adapter in the right side cabinet.

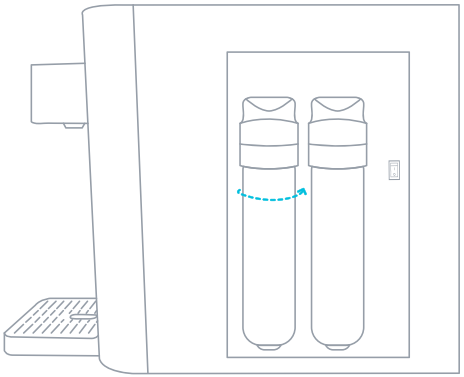

2. Twist the Carbon Block Filter into the right filter adapter in the right side cabinet.

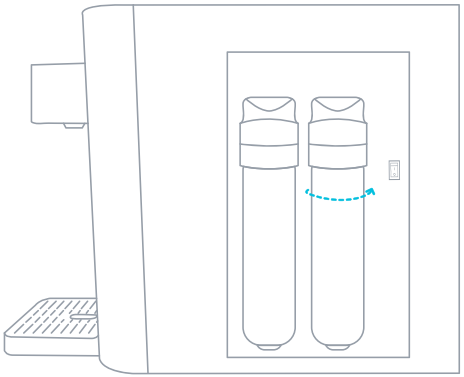

Finishing the Water Cooler Installation

3. Remove the plug from the water inlet (#10) located on the back of the unit. To do this press on the push connect ring that is behind the plug.

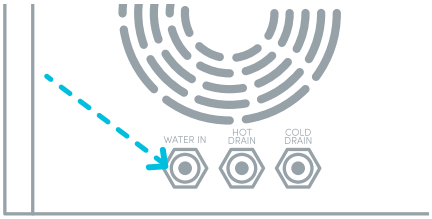

4. Locate the Valve and Tube Assembly. Connect the tube end of this assembly to the water inlet (#10) by pressing it in and pulling on it to tighten it into place.

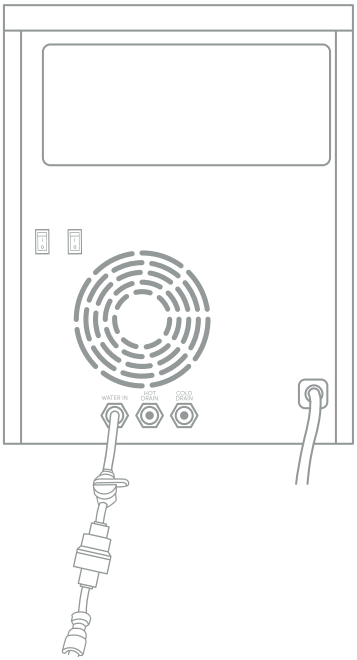

Finishing the Water Cooler Installation

5. Turn the Valve for the water source back on (the on position is parallel to the PE Tubing).

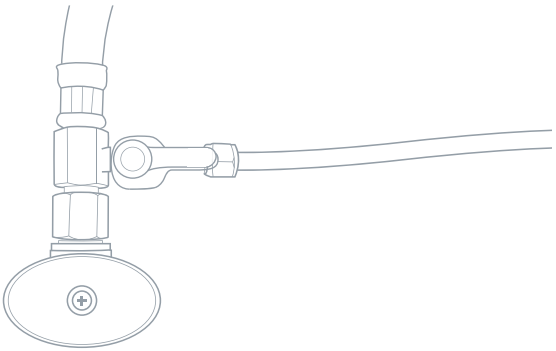

6. Turn on the Valve that is located behind the unit (the on position is parallel to the PE Tubing).

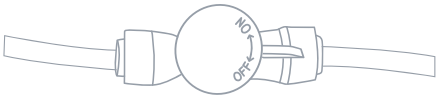

Finishing the Water Cooler Installation

Be sure to dispense a little water from both the hot and cold buttons prior to flipping on the heating (#9) and cooling (#8) switches located on the back of the machine.

8. Once the heating switch (#9) is turned on (I), it will take 15-20 minutes for the water to reach it's desired hot temperature.

9. Once the cooling switch (#8) is turned on (I), it will take up to 1 hour to reach the desired cold temperature.

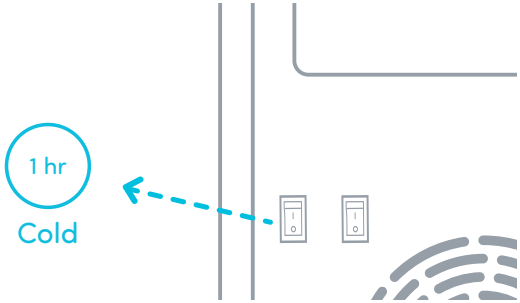

Installing and Removing the Drip Tray

No external drain needed, the overflow will collect here.

1. To install the drip tray, simply slide it into the area below the spouts until it snaps into place.

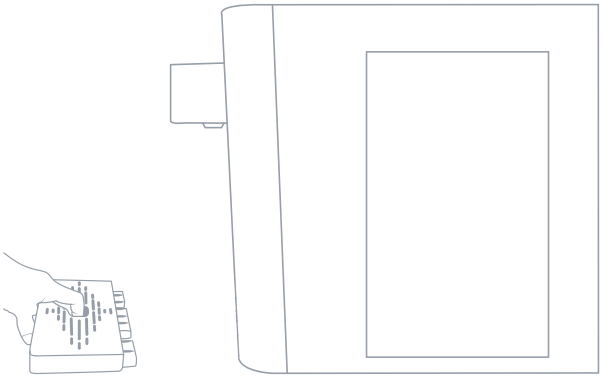

2. To remove the drip tray, place your fingers in the grid of the drip tray and with one hand gently pull the drip tray toward you to release it. Once it has been released you can remove the drip tray from the cooler to empty it.

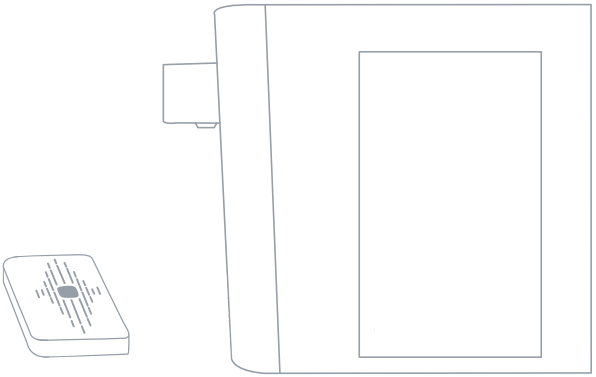

User Guide and Maintenance

Replacing the Filters

1. When the lifetime of the filter is near its end at 1,450 gallons or 5.5 months time, the green filter status indicator light on the display board will turn off and the red change filter indicator light on the display board will blink as a warning. When the filter lifetime is up, the red indicator light will be steady lit and the machine will beep to let you know that the filter needs to be changed.

2. Shut off the Valve located at the connection to the water source or the Valve located behind the unit.

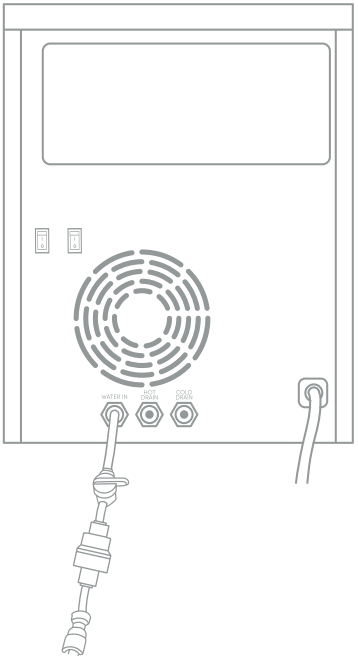

Replacing the Filters

3. Twist the expired filters to remove them from the Filter Adapter inside the side cabinet. Insert the new filters into the Filter Adapters by twisting them into place and rotating them clockwise. Make sure the Sediment Filter is on the left, and the Carbon Block Filter is on the right.

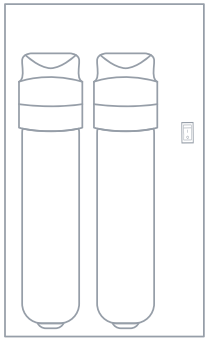

4. Turn on the Valve that was previously shut off. This Valve will be located at the connection to the water source or located behind the unit.

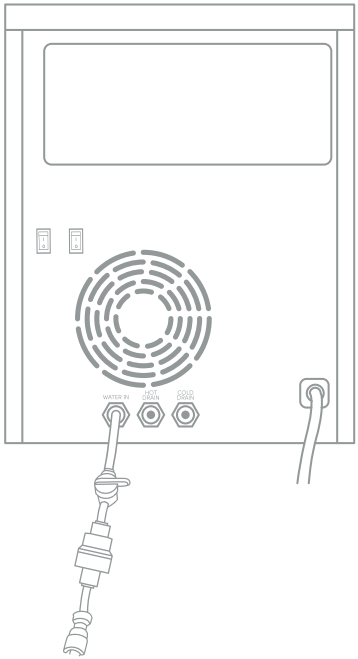

Replacing the Filters

5. After replacing the filters, press and hold the Filter Reset Button located to the right of the filters inside the cabinet.

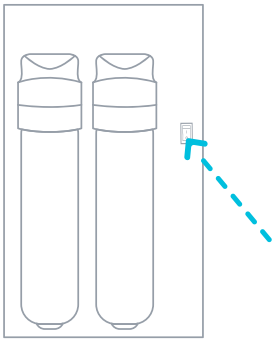

6. In order to flush the new filters, you can follow the steps of flushing the filters on pages 14-15 or allow the water to flow from the water spout (#4) for approximately 2 minutes until all three temperature buttons blink on the front of the unit. The machine will then begin filling again with new water.

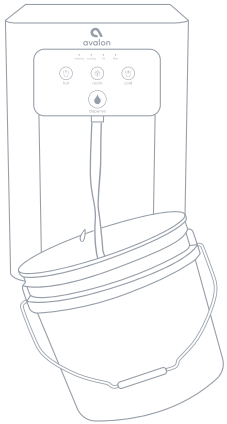

Leak Detection

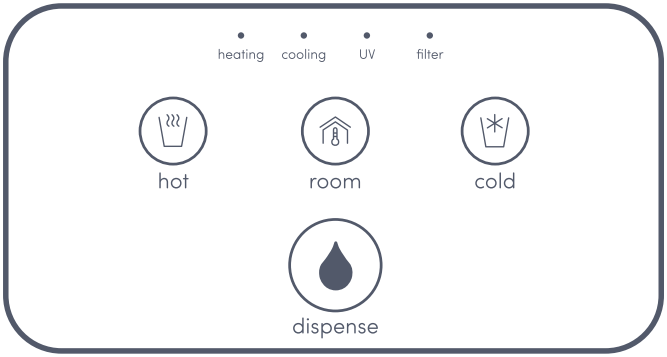

Our machines are equipped with a high-tech leak detector that will alert you of any potential leak. At the same time the machine will automatically shut off any intake of water to prevent a potential flood. In the event of a possible leak, the dispense button on the front panel will blink while the machine makes a beeping sound. Please check around the machine for any leaking water and determine the source of it. If you find the source of the leak, you can call our support line for assistance in fixing it. If you do not find the source of this leak, it may have been caused by accidental spillage of water or from a filter change. The leak detector is inside the machine and will need to be left to dry by itself once any excess water is removed.

Cleaning

Rinsing, Cleaning, and Draining

To prolong the lifetime of the machine, it is recommended that the unit be cleaned and sanitized manually about every six months.

To clean the outside of the unit
Use a disinfectant of your choice to wipe down the outside of the machine. Disinfectant does not come with this unit. It can be purchased separately from a local store.

To rinse the inside of the unit
The machine has been disinfected prior to departing from the factory. However, it is recommended to rinse and drain the unit prior to installation.

1. Before cleaning, make sure that the cooling switch (#8) and heating switch (#9) are in the off (O) position and unplug the machine.

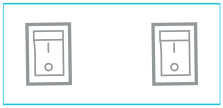

2. Remove the two screws located on the upper back of the cooler. Remove the top cover by lifting it off.

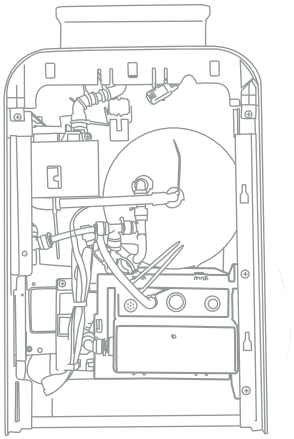

Rinsing, Cleaning, and Draining

3. Remove the water reservoir lid by unclipping the 5 locking tabs with a screwdriver or similar object. The water reservoir is the square holding tank at the back of the unit.

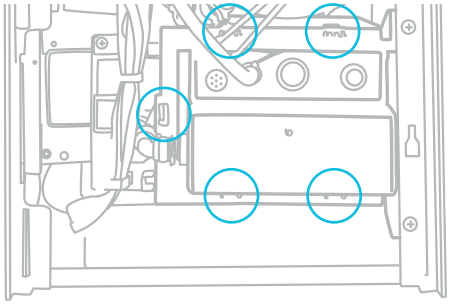

4. You may also need to disconnect the tubing that is attached to this lid. You can do so by removing the locking clip and pressing on the push connect ring while pulling the tubing off the side of the lid.

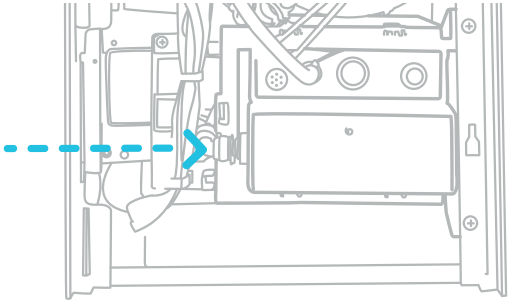

Rinsing, Cleaning, and Draining

5. Pour 0.6 gallons of clean water into the water reservoir.

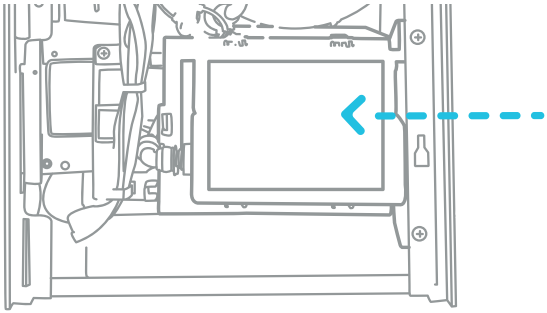

6. Place a large bucket beneath the hot drain (#15) and cold drain (#16) located on the back of the unit. Remove the drain covers and allow the water to drain from the unit. Water will start flowing as soon as the drain covers are removed.

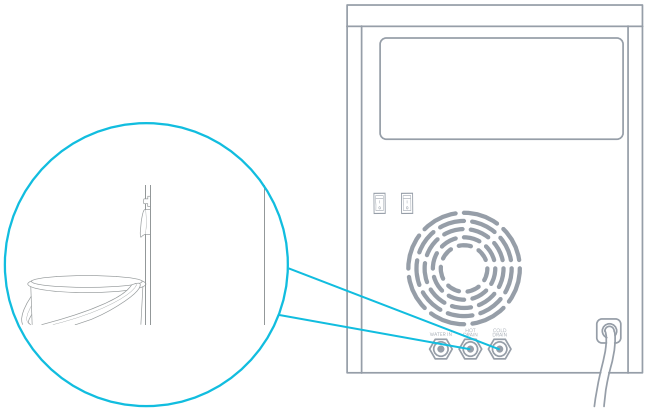

Caution: The dispenser will heat water to a temperature of approximately 185°F. It can cause severe burns if not handled carefully. Please use caution while operating and cleaning. Please allow ample time for any hot water inside the machine to cool down before draining it.

Rinsing, Cleaning, and Draining

7. Once water is completely drained, reposition the drain covers, water reservoir lid by clipping it back on, and top cover. Ensure that the tubes and wires are connected properly and you may use the dispenser as normal.

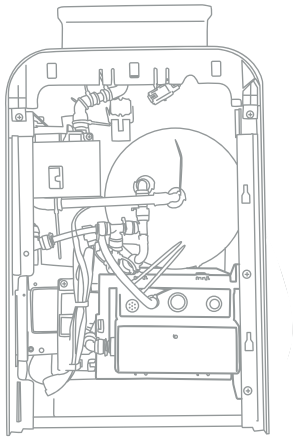

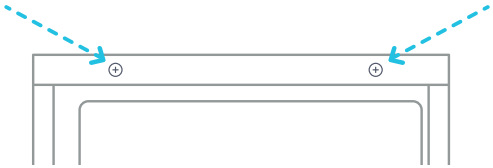

Cleaning

To remove mineral deposits that may have built up inside the the cold tank, mix 4 L of water with 200 g of citric acid crystals (not included) or cleaning solution of your choice.

1. Unscrew the top cover and unclip the water reservoir lid.

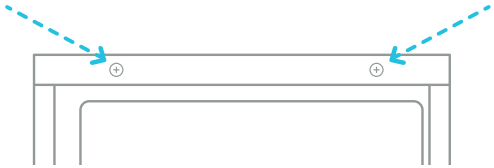

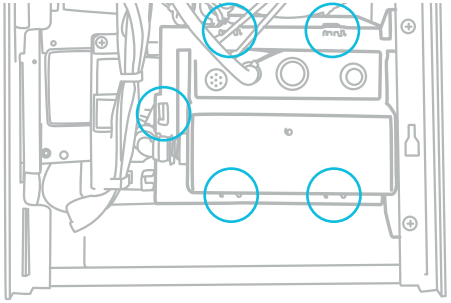

2. Put the mixture into the machine's water reservoir.

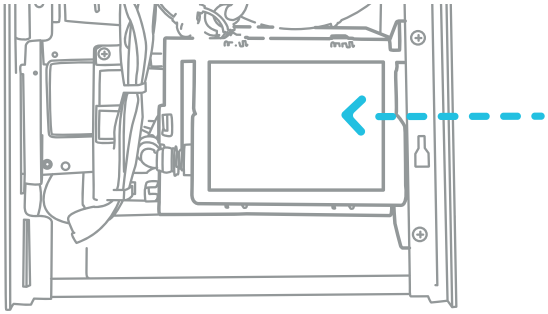

Cleaning

3. Plug in the power cord and turn on (I) the heating switch (#9). Press the hot water button and then hold down the dispense button until water flows from the spout. Press the cold water button and then hold down the dispense button until water flows from the spout. Then allow the water to heat for 15 minutes before continuing to dispense.

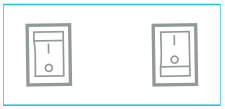

15 min

4. Turn off (O) the heating switch (#9) and allow the liquid mixture to cool down for 20 minutes.

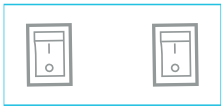

20 min

5. Drain the liquid from the hot drain (#15) and cold drain (#16), then flush with water two or three times by following the rinsing instructions above. Only disassemble parts mentioned to avoid damaging the machine.

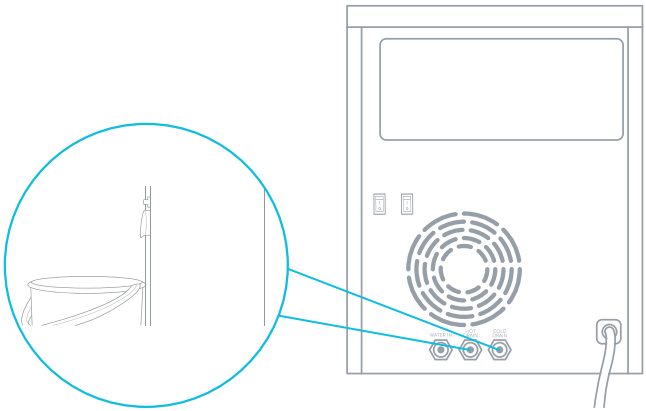

Troubleshooting

Troubleshooting

If you are having trouble with your water cooler please see the following solutions. You can also view our trouble shooting videos at the website below. Please feel free to contact us with any questions.

support@avalonh2o.com

www.avalonh2o.com

Troubleshooting

Dispense button is flashing and unit is beeping

If the dispense button is flashing and the unit is making a slight beeping sound, it is alerting you that there may be a leak in the unit. Please refer to page 26.

Water leaking from unit

- Check to make sure that pipes are connected properly.
- Inspect the adapter to ensure that it is connected properly.
- Water pipe may need to be replaced.

Water not dispensing at a hot or cold temperature

This could be caused by an over consumption of water in a short period of time causing the tanks to empty. Please allow 5 to 10 minutes for the water cooler tanks to refill. Allow the proper time for the water to heat and cool.

This could be caused by an interruption in the power supply. Please ensure that the power cord is connected to an outlet. Please make sure that the heating (#9) and cooling (#8) switches are in the on (I) position.

If all the water in the unit has been dispensed quicker than the tanks can fill, you can siphon water back into the tanks by holding the dispense button once a temperature is chosen until water starts to dispense again.

All three temperature buttons blinking

This means that the inner water reservoir was emptied quicker than it was able to be refilled. Wait 10 seconds until it can begin refilling again.

Safety

Safety

To reduce risk of injury and property damage, user must read this entire guide before assembling, installing and operating the dispenser.

Failure to execute the instructions in this manual can cause personal injury or property damage.

This product dispenses water at very high temperatures. Failure to use this properly can cause personal injury.

When operating this dispenser, always exercise basic safety precautions, including the following:

- Prior to use, this dispenser much be properly assembles and installed in
- accordance with this manual.
- This dispenser is intended for water dispensing only. Do NOT use other liquids. Do NOT use for other purposes. Never use any other liquid in the dispenser other than known microbiologically safe tap water.
- For indoor use only. Keep water dispenser in a dry place away from direct sunlight. Do NOT use outdoors.
- Install and use only on a hard, flat and level surface.
- Do NOT place dispenser in an enclosed space or cabinet.
- Do NOT operate the dispenser in the presence of explosive fumes.
- Position back of dispenser no closer than 20 cm from wall and permit free airflow between wall and dispenser. There must be at least 20 cm clearance on the sides of the dispenser to permit airflow.
- Use only properly grounded outlets.
- Do not use and extension cord with your water dispenser.
- Always grasp plug and pull straight out from outlet. Never unplug by pulling on power cord.
- To protect against electric shock, do NOT immerse cord, plug or any other part of the dispenser in water or other liquid.

Safety

- Ensure dispenser is unplugged prior to cleaning.
- Never allow children to dispense hot water without proper and direct supervision. Unplug unit to prevent unsupervised use by children.
- Service should be performed only by a certified technician.
- Warning: Do not damage the refrigerant circuit.
- This appliance can be used my children aged from 8 years and above if they have been given supervision or instruction concerning use of the appliance in a safe way and if they understand the hazards involved. Cleaning and user maintenance shall not be made by children unless they are older than 8 and supervised. Keep the appliance and its cord out of reach of children less than 8 years.
- Appliances can be used by persons with reduced physical, sensory or mental capabilities or lack of experience and knowledge if they have been given supervision or instruction concerning use of the appliance in a safe way and understand the hazards involved. Children shall not play with the appliance.
- This appliance is intended to be used in a household and similar applications such as: kitchen area in shops, offices and other working environments, bed and breakfast type environments, catering and similar non-retail applications.
- Do not store explosive substances such as aerosol cans with flammable propellant in this appliance.
- If the supply cord is damaged, it must be replaced by a special cord assembly available from the manufacturer or its service agent.
- Never turn the machine upside down or lean it more than 45°.
- Thermostat has been adjusted. There is no need to adjust it by yourself. When the matching is below the freezing point and blocked by ice, the cooling switch should be turned off for 4 hours before turning it on again to continue its operation.
- This machine should not be plugged back in until 3 minutes after it has been unplugged.
- In order to ensure water is filtered properly, both for health & safety, as well as proper function of the machine, please replace the filters when the machine begins to give notice of expiring filters. Once the filters have expired (Either by dispensing 1,500 gallons or 6 months of time), the machine will stop allowing water to pass through the filters. If this happens, change the filters as soon as possible, and then reset the machine, which will allow it to function again properly.

Warranty

Warranty

Models included are:
A1TLWATERCOOLER, A2TLWATERCOOLER, A3BLOZONEWTRCLR, A3F, A3F-SC, A4BLWTRCLR, A4F, A1BOTTLELESS, A5BOTTLELESS, A5BLK, A6BLWTRCLRWHT, A6BLWTRCLRBLK, A7BOTTLELESS, A7BOTTLELESSBLK, A8CTBOTTLELESSWHT, A8CTBOTTLELESSBLK, A9CTELECTRICSS, A9ELECTRICBLK, A9ELECTRICWHT, A10-TL, A11-CTTL, A12-CTPOU, A13, A14, A15, A1CTWTRCLRBLK, A1CTWTRCLRWHT, A3BLK, A4F, A5BLK, A6SC-WHT, A6SC-BLK, A10BLK, A11BLK, A12BLK, A13BLK, A14BLK, A13CT, A13-S, B8WHT, B8BLK, A9

Products listed above are covered by the terms of this Limited Warranty. For purposes of this Limited Warranty, the term "product" means any water cooler bottled or bottleless manufactured for Avalon. Avalon warrants that it will, at Avalon's option, replace or repair the Purchaser's Avalon product sold in the U.S. or Canada by an authorized retailer if that product is defective due to faulty workmanship or materials, subject to the limitations described in this Limited Warranty. Avalon undertakes no responsibility for the quality of the goods except as otherwise provided in this warranty. There are no warranties that extend beyond the description on the face hereof. This Limited Warranty is valid only in connection with the original purchase of new products from authorized retailers and extends from the original purchase date of the original product purchased. This warranty extends only to the original purchaser of the product and lasts for one (1) year from the date of the original purchase or until the original purchaser of the product sells or transfers the product, whichever first occurs. An "original purchaser," for the purposes of this Limited Warranty, is an individual or entity who purchases the product directly from Avalon or an authorized retailer of Avalon with the intent to use the product for personal consumer use and commercial or industrial use and not with the intent to resell the product. An "authorized retailer," for purposes of this Limited Warranty, is an individual or entity authorized by Avalon to sell the product directly to original purchasers. An individual or entity that purchases the product from whatever source with the intent to resell the product is an unauthorized reseller ("unauthorized reseller"). For the purpose of this Limited Warranty a "Third Party" would be considered any plumber, maintenance company, or individual hired by the Purchaser.

This Limited Warranty does not apply to used, refurbished, renewed, floor model or "demo" products, or to products sold by unauthorized resellers, including without limitation, unauthorized resellers on third party websites, including, without limitation, Craigslist, eBay, Amazon, etc. Unauthorized resellers are not "original purchasers" for the purpose of this Limited Warranty. If the purchaser is not the original purchaser of this product, the purchaser takes the product "AS IS," "with all faults" and without warranty. Avalon reserves the right to require a valid serial number located on your product to submit a valid claim under this Limited Warranty. Products where the serial number has been removed or evidence showing the removal or attempted removal of the serial number label will not be eligible to make a claim under this Limited Warranty. IF THE PURCHASE OF THIS PRODUCT WAS NOT DIRECTLY FROM AVALON, PROOF OF PURCHASE WILL BE REQUIRED TO DEMONSTRATE THAT PURCHASER IS THE ORIGINAL PURCHASER AND THE PRODUCT WAS PURCHASED FROM AN AUTHORIZED RETAILER, AND ELIGIBLE TO MAKE A VALID CLAIM UNDER THIS LIMITED WARRANTY.

Your purchase date is established from the date of your sales receipt. Avalon may require the purchaser to provide proof of the quality and condition of the water cooler if the purchaser makes a claim under this Limited Warranty. Avalon reserves the right to invalidate this Limited Warranty if the water cooler is determined, in Avalon's reasonable discretion, to be inadequate or if the water cooler is found to be in an unsanitary condition. This warranty does not apply if the product was damaged or failed because of accident, improper handling or operation, relocation, abuse, misuse, unauthorized repairs made or attempted, or improper installation or maintenance. Under this Limited Warranty, products are required to be plugged directly into a grounded wall outlet. Plugging a product into an extension cord or surge protector will be considered misuse and will void this Limited Warranty. If damage to the product has occurred during shipping, the damage must be reported to Avalon within the first 30 days from the original purchase date to be eligible to make a claim under the Limited Warranty. Shipping damage reported to Avalon outside of the first 30 days from the original purchase date will not be eligible for a valid claim under this Limited Warranty. This warranty does not cover shipping costs for the return of products to Avalon for repair or replacement.

To submit a valid claim under this Limited Warranty, troubleshooting the product with an Avalon Customer Success Expert is required. If troubleshooting the product is refused by the Purchaser, Avalon reserves the right to deny the Limited Warranty Claim. In the event a part is necessary to correct the problem with a Product, Avalon will provide the part at no cost to the original purchaser under this Limited Warranty. Replacing parts or attempting to correct an issue with the Product is required prior to submitting a claim for a replacement product under this Limited Warranty. Instructions for troubleshooting a Product or replacing a part will be provided by Avalon. Troubleshooting, repairs, part replacement, installation, and proper maintenance are the responsibility of the Purchaser. Instructions for proper installation and maintenance will be provided in the user manual.

Installation, maintenance, or repairs of the Product is the responsibility of the Purchaser. The Purchaser reserves the right to use a Third Party for installation, maintenance, and repair at their own risk. Avalon is not responsible for any additional cost incurred for installation, maintenance, or repair of the Product including but not limited to additional material needed for installation or the cost of a Third Party. Damage or failure of the Product due to improper installation, maintenance, or repair caused by a Third Party or the Purchaser is not the responsibility of Avalon and will not be covered under this Limited Warranty. Instructions for proper installation and maintenance will be provided in the user manual.

ANY AND ALL WARRANTIES, EXPRESSED OR IMPLIED (INCLUDING, WITHOUT LIMITATION, ANY IMPLIED WARRANTY OF MERCHANTABILITY), LAST ONE YEAR FROM THE DATE OF ORIGINAL PURCHASE OR UNTIL THE ORIGINAL PURCHASER OF THE PRODUCT SELLS OR TRANSFERS THE PRODUCT, WHICHEVER FIRST OCCURS. IN NO EVENT SHALL AVALON'S LIABILITY UNDER ANY EXPRESS OR IMPLIED WARRANTY INCLUDE (I) INCIDENTAL OR CONSEQUENTIAL DAMAGES FROM ANY CAUSE WHATSOEVER, INCLUDING BUT NOT LIMITED TO ELECTRICAL OR WATER DAMAGE, OR (II) REPLACEMENT OR REPAIR OF ANY HOUSE FUSES, CIRCUIT BREAKERS OR RECEPTACLES. NOTWITHSTANDING ANYTHING TO THE CONTRARY, IN NO EVENT SHALL AVALON'S LIABILITY UNDER ANY EXPRESS OR IMPLIED WARRANTY EXCEED THE PURCHASE PRICE OF THE PRODUCT AND ANY SUCH LIABILITY SHALL TERMINATE UPON THE EXPIRATION OF THE WARRANTY PERIOD.

Except as otherwise provided, Avalon will not charge Original Purchaser to repair or replace the purchaser's Product if it is deemed defective during the length of this Limited Warranty, but any transportation costs associated with repairs or replacements are Purchaser's responsibility. No new warranty is provided with a replacement product. The warranty for the replacement product runs from the date of the original purchase of the original product. In the event that repair is necessary, such repair will be at no charge to the Purchaser except for transportation costs associated with such repair or replacement of a product in compliance with the terms of this Limited Warranty.

In the event, a warranty claim is filed and a warranty replacement is deemed necessary, the purchaser will be required to surrender the original product to Avalon at the time of replacement.

Some states and provinces do not allow limitations on how long an implied warranty lasts or the exclusion or limitation of incidental or consequential damages, so these exclusions or limitations may not apply to you. This warranty gives you specific legal rights. You may also have other rights which vary from state to state and province to province.